Refractron Advanced Porous Ceramics

UNI-DISC™ fine bubble diffusers

UNI-DISC™ dual porosity diffuser benefits:

- ✓ Uniform fine bubble
- ✓ Low energy consumption
- ✓ Less frequent change-outs and ease of installation
- ✓ Lower cost of ownership

UNI-DISC™ advantages for ozone or oxygen:

- ✓ Improved gas transfer efficiency
- ✓ Decreased fouling potential
- ✓ Fine bubble diffusion to optimize ozone or oxygen mass transfer
- ✓ Improved disinfection process
- ✓ Durable design with stainless hardware & all ceramic diffuser

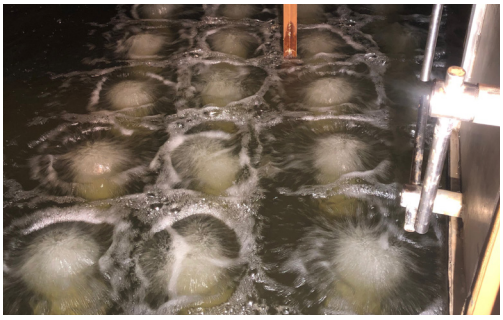

1.315.331.6222
sales@refractron.com
www.refractron.com
5750 Stuart Avenue,
Newark, NY 14513, USA

022020

Refractron

Refractron Advanced Porous Ceramics

UNI-DISC™ fine bubble diffusers

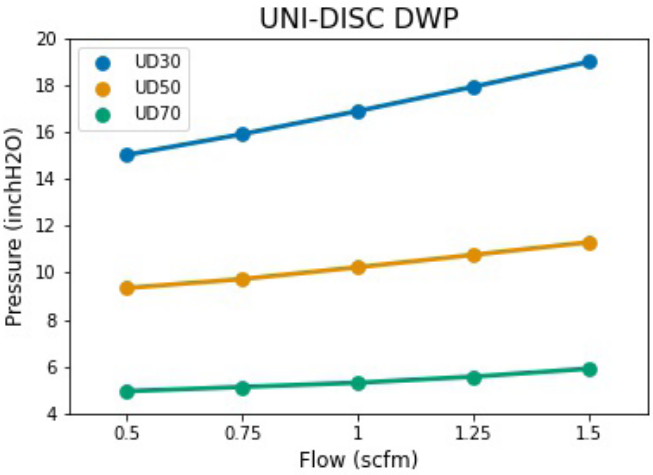

FLOW VS PRESSURE

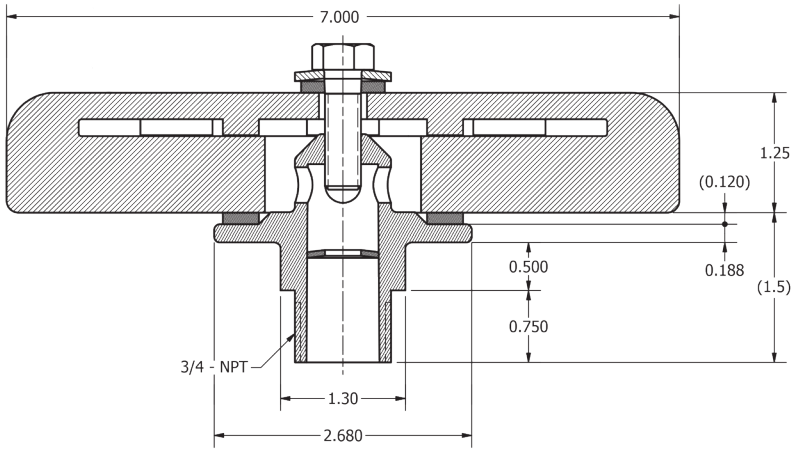

SECTION

TECHNICAL PROPERTIES

COLOR	Light gray	MODULUS OF RUPTURE 3pt MOR *[MPa] ASTM C-583*	
CHEMISTRY: *[wt%] ICP & EDS*		*RT*	26
SiO_2	8	*400°C*	26
Al_2O_3	87	*800°C*	23
Other	5	COEFFICIENT OF THERMAL EXP. *x10⁶ [RT-500 °C] ASTM C-372*	8.8
DENSITY *[g/cm³] ASTM C-373*	2.1	MAXIMUM USE LIMIT *[°C]*	800
POROSITY *[%] BASED ON BULK DENSITY*	43	THERMAL SHOCK RESISTANCE	Good

NOTES: Typical values are not intended to be used as a specification. Contact with Refractron for application suitability.
UNI-DISC™ are offered with 30, 50 and 70 micron pore size.

1.315.331.6222
sales@refractron.com
www.refractron.com
5750 Stuart Avenue,
Newark, NY 14513, USA

022020

Refractron